REV	DESCRIPTION	DATE	APPROVED

ROHS Compliant REACH

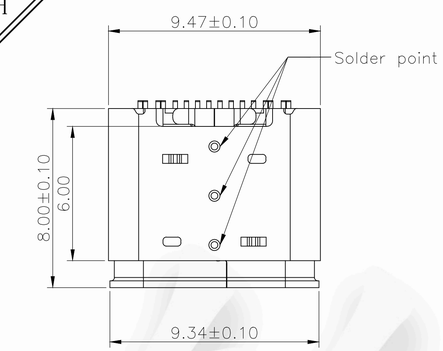

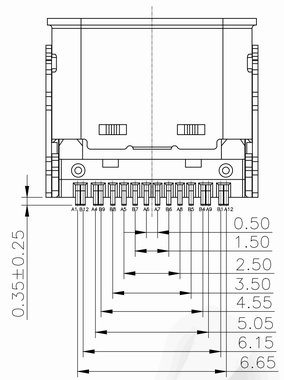

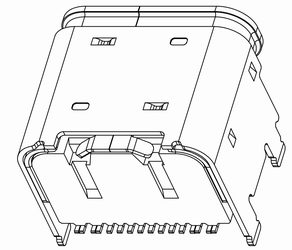

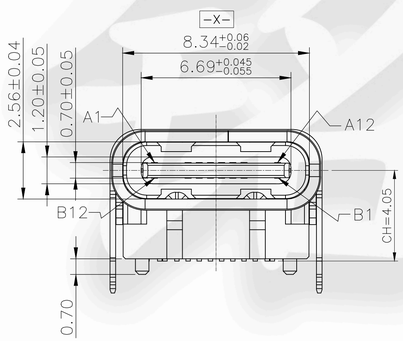

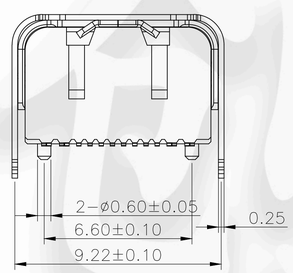

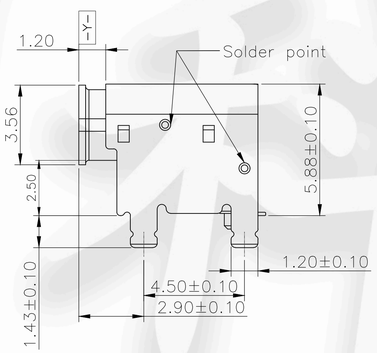

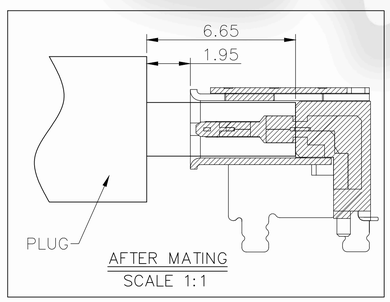

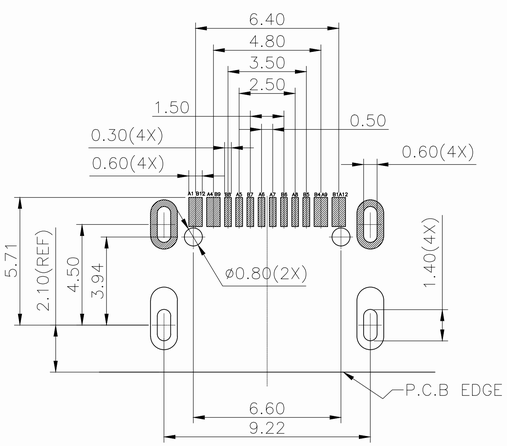

RECOMMEND P.C.B LAYOUT(COMPONENT SIDE)
TOLERANCE FOR PCB LAYOUT IS ± 0.05.T=1.20mm

NOTES:
1.MATERIAL SPECIFICATION:
1. HOUSING/MOLDING: LCP+30% G/F & PA9T. UL94 V-0. BLACK.
2. CONTACTS: C2680R-H & C7025 TM04.T=0.25mm.
3. MID PLATE: SUS 301R-H. T=0.15mm.
4. INSIDE SHELL: SUS 304R-1/4H.T=0.30mm.
5. OUTSIDE SUS 304R-1/4H.T=0.25mm.
2.PLATING SPECIFICATION:
1. CONTACTS: Ni 50u" MIN. UNDER PLATED OVER ALL. Au PLATED ON THE FUNCTIONAL AREA OF CONTACT. (GOLD PLATING THICKNESS FOLLOW THE P/N). GOLD FLASH PLATING ON SOLDER AREA.
2. INSIDE SHELL OR OUTSIDE SHELL: Ni 30u" MIN. UNDER PLATED OVER ALL.
3.MECHANICAL PERFORMANCE:
1. INSERTION FORCE: 5~20N.
2. REMOVAL FORCE: 8~20N.
3. DURABILITY: 10000 CYCLES.
4.ELECTRICAL PERFORMANCE:
1. CURRENT RATING: 5A.
2. VOLTAGE RATING: 20V.
3. INSULATION RESISTANCE: 100MΩ MIN.
4. DIELECTRIC WITHSTAND VOLTAGE: AC 100V FOR 1 MINUTE.
5. .LOW CONTACT RESISTANCE: INITIAL 40MΩ.
5. ENVIRONMENTAL PERFORMANCE:
1. OPERATING TEMPERATURE: -30°C~+80°C.
2. THE PEAK TEMPERATURE ON THE BOARD SHALL BE MAINTAINED FOR 10 SECONDS AT 260°C.
10. MARK" ▼ AS THE FIRST PIECE FOCUS ON SIZE INSPECTION.
11. MARK" AS THE FAI DIMENSION NUMBER.
12. MARK" AS CPK DIMENSION NUMBER.

NO.	DESCRIPTION	MATERAL	REMARKS	
5	OUTER SHELL	SUS304 T=0.25MM	NI 40u"MIN	1PCS
4	INNER SHELL	SUS304 T=0.30MM	NI 40u"MIN	1PCS
3	SHIELDING PLATE	SUS301 T=0.15MM	N/A	1PCS
2	CONTACT	C2680 T=0.15MM	Mating area 1u"Au Solder Tails: G/F Underplate: 80u"Min Ni overall	2SET
1	INSERT MOLDING	LCP UL94V-0	BLACK	1PCS

USB TYPE-C PIN ASSIGNMENTS

PIN NUMBER	SIGNAL NAME	PIN NUMBER	SIGNAL NAME
A1	GND	B12	GND
A4	VBUS	B9	VBUS
A5	CC1	B8	SBU2
A6	Dp1	B7	Dn2
A7	Dn1	B6	Dp2
A8	SBU1	B5	CC2
A9	VBUS	B4	VBUS
A12	GND	B1	GND

CUSTOMER DRAWING

UNITS	SCALE	SHEET
mm	1:1	

PROJECTION:

GENERAL TOLERANCE
0. ±0.35
0.0 ±0.25
0.00 ±0.15
0.° ±4°
0.0° ±3°

DRAW: DAP
CHECK: HWT
APPD: HHM

铭创科技（东莞）有限公司
Mingchuang Technology (Dongguan) Co., Ltd

TITLE: TYPE C母座16PIN 板上垫高 2.5 CH=4.05 有翻边

MAT'L: SEE TABLE
FINISH: SEE TABLE

DWG. NO. 1523.TCF.16DG.J3
PART NO. _____
SIZE A4