REV	DESCRIPTION	DATE	APPROVED

ROHS Compliant REACH

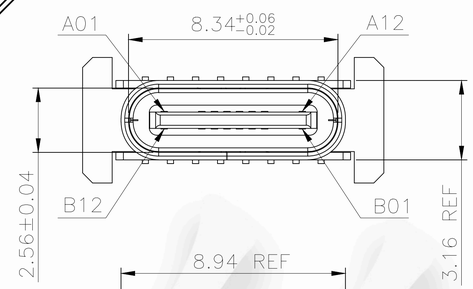

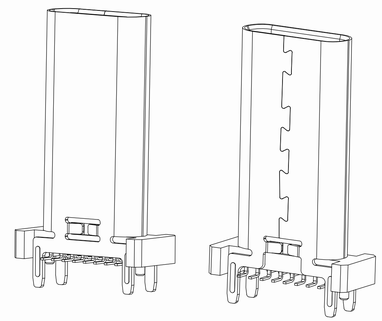

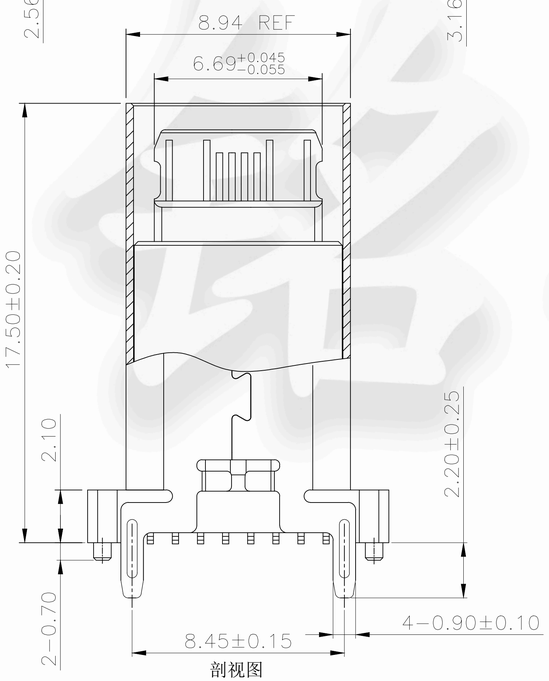

剖视图

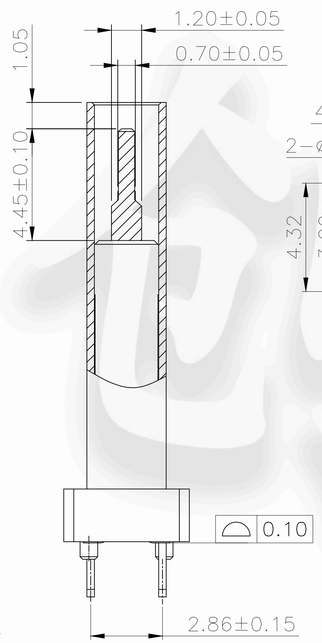

剖视图

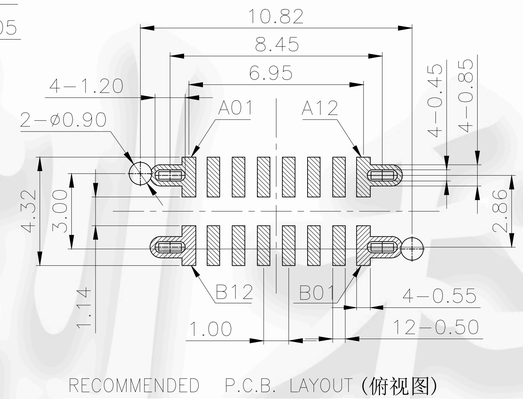

RECOMMENDED P.C.B. LAYOUT (俯视图)

TOLERANCE UNSPECIFIED ±0.05mm

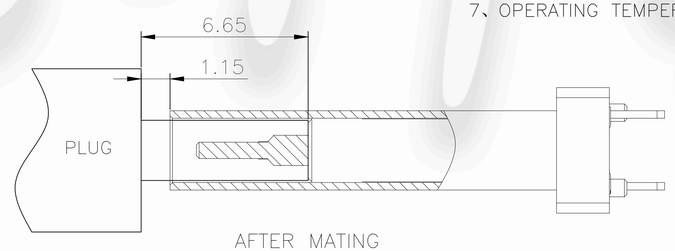

AFTER MATING

SPECIFICATION:

1、ELECTRICAL:
- 1.1 CURRENT RATING:5A;
- 1.2 CONTACT RESISTANCE:40mΩ Max;
- 1.3 DIELECTRIC WITHSTANDING VOLTAGE:100V AC;
- 1.4 INSULATION RESISTANCE:100 MΩ MIN;

2、MECHANICAL;
- 2.1 MATING FORCE:5~20N;
- 2.2 UNMATING FORCE:8~20N;
- 2.3 DURABILITY:10000 CYCLES;6~20N AFTER DURABILITY TEST;

3、MATERIAL:
- 3.1 HOUSING&MOLDING:BLACK LCP UL94V−0;
- 3.2 TERMINAL:C7025 T=0.15mm;
- 3.3 SHELL:SUS304 T=0.30mm;
- 3.4 MID PLATE:SUS304 T=0.15mm;

4、PLATING SPECIFICATION:
- 4.1 TERMINAL:CONTACT POINT GOLD PLATED 3u "MIN
  PIN WELDING AREA GOLD PLATED 1u" MIN.
- 4.2 SHELL:PLATED Ni 60u" MIN(Salt spray 48H)

5、ELECTROPLATED PRODUCTS NEED TO UNDERGO TIN ADHESION TESTING: THE TIN ADHESION AREA SHOULD REACH OVER 95%.

6、SMT REFLOW SOLDERING (PEAK VALUE 260 °C ± 5 ° C) SHALL BE FREE OF BLISTERING, GLUE MELTING AND POOR COLOR CHANGE (DEFORMATION WITHIN TOLERANCE)

7、OPERATING TEMPERATURE: −40°C~+85°C

PIN	SIGNAL NAME	PIN	SIGNAL NAME
A1	GND	B12	GND
A4	VBUS	B9	VBUS
A5	CC1	B8	SBU2
A6	D+	B7	D−
A7	D−	B6	D+
A8	SBU1	B5	CC2
A9	VBUS	B4	VBUS
A12	GND	B1	GND

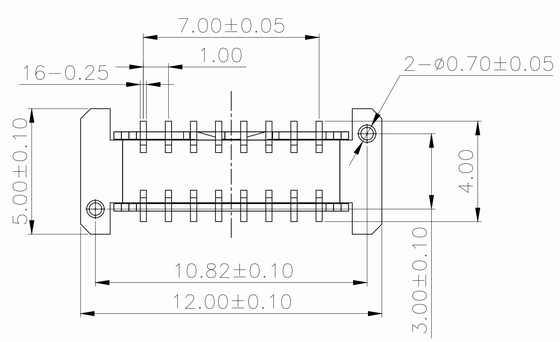

CUSTOMER DRAWING

UNITS	SCALE	SHEET
mm	1:1	

PROJECTION:

DRAW: DAP

CHECK: HWT

APPD: HHM

GENERAL TOLERANCE
- 0. ±0.35
- 0.0 ±0.25
- 0.00 ±0.15
- 0.° ±4°
- 0.0° ±3°

铭创科技（东莞）有限公司
Mingchuang Technology (Dongguan) Co., Ltd

TITLE: TYPE C母座16PIN 立贴SMT H=17.5

MAT'L: SEE TABLE

FINISH: SEE TABLE

DWG. NO.: 2029.TCF.16LS.J79

PART NO.: ——

SIZE: A4